ELE228 - Programming for Circuits and Systems Preliminary Work 2

1 Questions

1. Consider the circuit in *Fig. 1.* The switch S_1 closes at $t = 0$, while at the same time, switch S_2 opens. Use the Laplace transform method (on paper) to find $v_{\text{out}}(t)$ for $t > 0$.

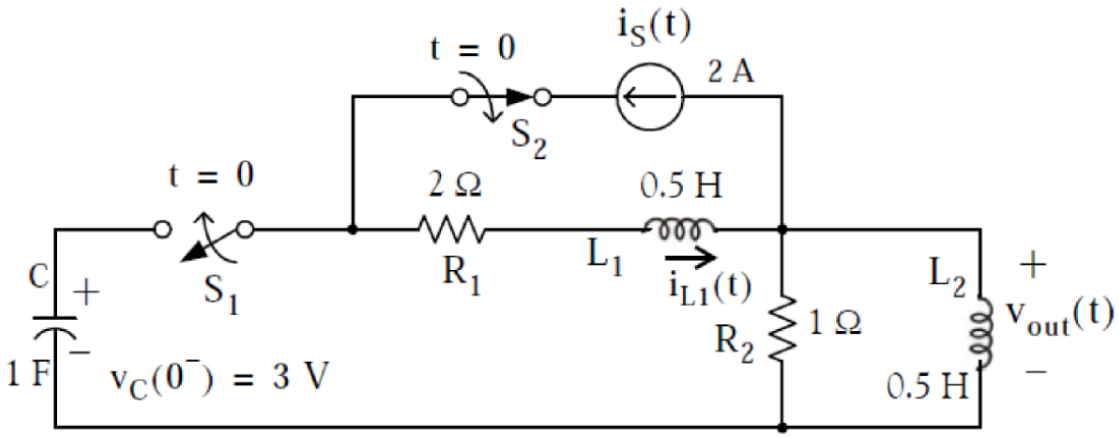

Figure 1

2. Consider again the circuit in *Fig. 1.* Using the appropriate MATLAB commands, verify that each step of your calculation on paper is correct. Show everything clearly in your report. You may copy and paste your scripts and command window outputs.

3. Plot $v_{\text{out}}(t)$ for $0 \leq t \leq 0.05$ s.

2 Answers

1. Investigate the circuit for $t < 0$ and $t > 0$.

For $t < 0$,

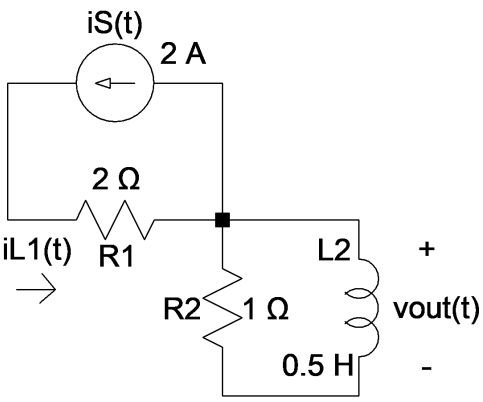

Circuit 2

$i_{L_1}(0^-) = 2$ A.

For $t > 0$,

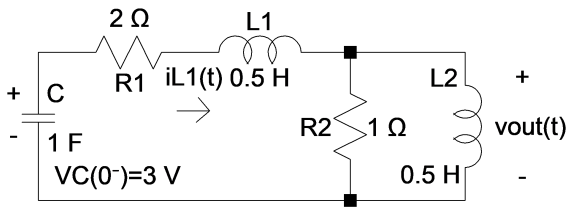

Circuit 3

$i_{L_1}(0) = i_{L_1}(0^-) = 2$ A.

Transform *Circuit 3* into the s–domain as seen below.

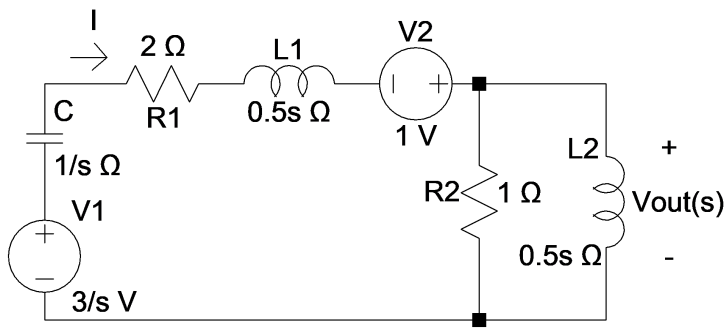

Circuit 4

By KVL,

$$-\frac{3}{s}+\frac{I(s)}{s}+2I(s)+0.5sI(s)-1+I(s)\left(\frac{0.5s}{1+0.5s}\right)=0,$$

$$I\left(\frac{1}{s}+2+0.5s+\frac{0.5s}{1+0.5s}\right)=\frac{3}{s}+1,$$

$$I=\frac{\frac{3}{s}+1}{\frac{1}{s}+2+0.5s+\frac{s}{2+s}}=\frac{s(2+s)\left(\frac{3}{s}+1\right)}{s(2+s)\left(\frac{1}{s}+2+0.5s+\frac{s}{2+s}\right)}=\frac{2(s+2)(s+3)}{s^3+8s^2+10s+4}.$$

By the voltage divider,

$$V_{\text{out}}=I\cdot\frac{1\cdot 0.5s}{1+0.5s}=\frac{2s(s+3)}{s^3+8s^2+10s+4}.$$

Find the roots of the expression in the denominator. Numerical approximation gives

$$s_1\approx -6.57,\quad s_2\approx -0.715+j0.313,\quad s_3\approx -0.715-j0.313=s_2^*.$$

Apply partial fraction decomposition.

$$\frac{2s(s+3)}{s^3+8s^2+10s+4}=\frac{A}{s+6.57}+\frac{B}{s+0.715+j0.313}+\frac{C}{s+0.715-j0.313}$$

Find the values A, B, and C.

$$A=\left.\frac{2s(s+3)}{(s+0.715+j0.313)(s+0.715-j0.313)}\right|_{s=-6.57}\approx 1.364$$

$$B=\left.\frac{2s(s+3)}{(s+6.57)(s+0.715-j0.313)}\right|_{s=-0.715-j0.313}\approx 0.318-j0.927\approx 0.980\underline{/-71.1^\circ}$$

$$C=\left.\frac{2s(s+3)}{(s+6.57)(s+0.715+j0.313)}\right|_{s=-0.715+j0.313}\approx 0.318+j0.927\approx 0.980\underline{/71.1^\circ}$$

Using the inverse Laplace transform table, the solution is then

$$v_{\text{out}}(t)=\mathcal{L}^{-1}\left\{V_{\text{out}}(s)\right\}=\left[1.364e^{-6.57t}+1.96e^{-0.715t}\cos(0.313t+71.1^\circ)\right]\cdot u(t).$$

2. Code:

```
syms s

num = 2*s*(s+3)
denom = s^3 + 8*s^2 + 10*s + 4

Vout = expand(num) / denom

numc = [2 6 0];
denomc = [1 8 10 4];

[r, p, k] = residue(numc, denomc)
```

```
>> exp2_2

num =

2*s*(s + 3)


denom =

s^3 + 8*s^2 + 10*s + 4


Vout =

(2*s^2 + 6*s)/(s^3 + 8*s^2 + 10*s + 4)


r =

   1.3644 + 0.0000i
   0.3178 + 0.9270i
   0.3178 - 0.9270i


p =

  -6.5708 + 0.0000i
  -0.7146 + 0.3132i
  -0.7146 - 0.3132i


k =

     []

>>
```

We can infer from the command window that the values are consistent.

3. Code:
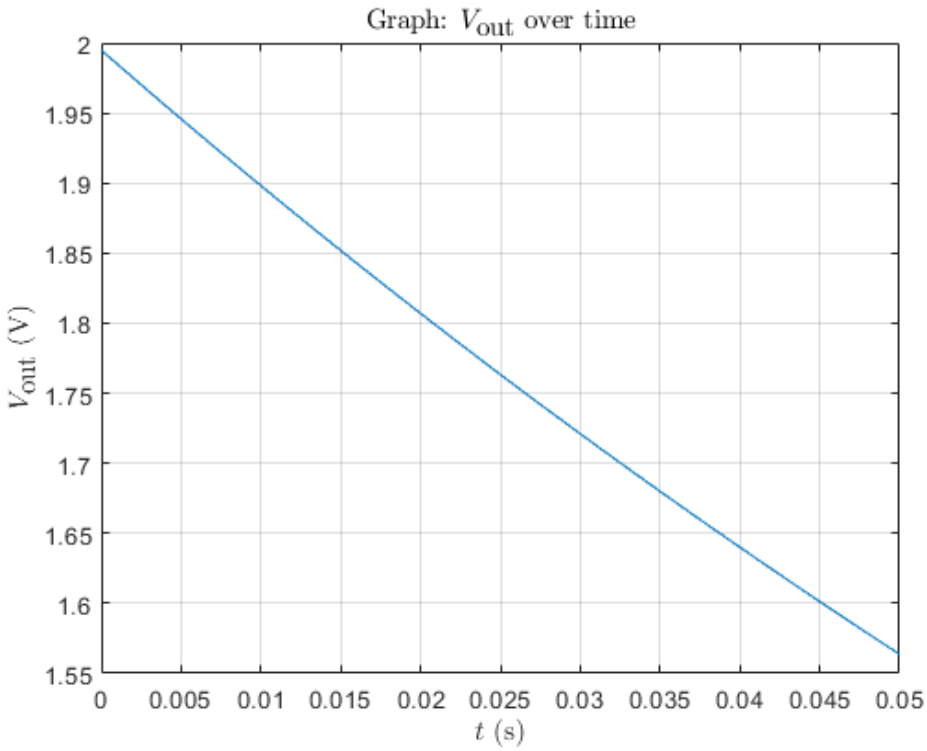
```
set(gca,'TickLabelInterpreter','latex')

t = 0:0.0001:0.05;
Vout = 1.36*exp(-6.57*t) + 1.96*exp(-0.715*t).*cos(0.313*t+degtorad(71.1));
plot(t, Vout)

grid on

xlabel('$t$', Interpreter='latex')
ylabel('$V_{\textrm{out}}$', Interpreter='latex')
title('Graph: $V_{\textrm{out}}$ over time', Interpreter='latex')
```